Journal of Research in Chemistry

E-ISSN: 2709-9423
P-ISSN: 2709-9415
JRC 2022; 3(2): 14-22

www.chemistryjournal.net
Received: 16-04-2022
Accepted: 21-05-2022

Dr. Yogesh Kumar
Assistant Professor,
Department of Chemistry,
Shri Kalyan Rajkiya Kanya Mahavidyalaya, Sikar,
Rajasthan, India

Dr. Shyam Kumar Meena
Assistant Professor,
Department of Chemistry,
Govt. College, Dholpur,
Rajasthan, India

Dr. Rajayashree Pandey
Associate Professor (Retired),
Department of Chemistry,
University of Rajasthan,
Jaipur, Rajasthan, India

Correspondence
Dr. Yogesh Kumar
Assistant Professor,
Department of Chemistry, Shri Kalyan Rajkiya Kanya Mahavidyalaya, Sikar,
Rajasthan, India

Procedure for Polarographic analysis of some drugs and their metal complexes

Dr. Yogesh Kumar, Dr. Shyam Kumar Meena and Dr. Rajayashree Pandey

Abstract
Drugs are substances that alter the body's actions and natural chemical environment. They include medications and narcotics but the drugs that are taken to prevent or cure a disease or to alleviate a body disorder are referred to as medicines. It has been pointed out that electrochemical techniques are well suited for the determination of drugs in various samples, that is, raw material, pharmaceutical dosages forms even those involving a complex matrix such as syrups, tablets, creams, suppositories, or ointments or else in biological fluids. A large number of pharmaceuticals can be reduced or oxidized in the available potential range and their waves can be used in their determination. It seems that often the therapeutical activity is paralleled by electrochemical reactivity.

Keywords: Drugs, Polarographic method, metal complex.

Introduction

Drugs are substances that alter the body's actions and natural chemical environment. They include medications and narcotics but the drugs that are taken to prevent or cure a disease or to alleviate a body disorder are referred to as medicines.

To avoid dependence on foreign countries as well as to make cost effective medicines available in the Indian open market it will be worthwhile to undertake vigorous research efforts and study of medicinally important compounds and their metal complexes.

For curing these diseases people now a day prefer ayurvedic medicine in place of allopathic medicine due to much lesser side effects. Most of the ayurvedic medicines contain heavy metals like Au, Hg, As, Cd, Pb etc. they not only help in curing these diseases but also snatch away the patient from the mouth of death. So we would like to electrochemically analyze these medicines for metal and organic content present in them.

The great importance of medicines and their metal complexes for human beings are attracting wide attention in different areas of research [1-2].

It has been pointed out that electrochemical techniques are well suited for the determination of drugs in various samples, that is, raw material, pharmaceutical dosages forms even those involving a complex matrix such as syrups, tablets, creams, suppositories, or ointments or else in biological fluids. Electrochemical methods are most suitable to investigate the redox properties of a new drug; this can give insight into its metabolic fate [3-4].

Electrochemical techniques are powerful and versatile analytical techniques that offer high sensitivity, accuracy, and precision as well as a large linear dynamic range, with relatively low-cost instrumentation. A large number of analytical techniques such as X-ray fluorescence [5], Atomic absorption spectroscopy [6], Flame photometry [7], Infrared spectrophotometry [8-9], Gas chromatography–mass spectrometry [10], High performance liquid chromatography [11], Liquid-liquid chromatography–mass spectrometry [12-13], Colorimetry [14], Thin layer chromatography [85] etc. are used for drug analysis.

Out of these electrochemical methods Direct Current Polarography proved to be one of the most sensitive and reproductive methods available today for analysis in the inorganic, organic, geochemical, biochemical, medical, pharmaceutical fields and indeed in most areas of analytical chemistry [16-18].

Polarography is also used for quantitation purpose. There are numerous paper published on determination of drug content by polarographic methods [19-21]. Quantitation procedures are intended to measure the analytes present in a given sample.

Polarographic study of Indian drugs

The determination of antihypertensive drug Atenolol through the complex formation with Cu (II) has been done electrochemically at dropping mercury electrode [22]. The study of Polarographic Reduction and Electrode Kinetics of Antidepressant Drug Bupropion Hydrochloride has been done at D.M.E [23]. The study of polarographic reduction and electrode kinetics of antiretroviral drug zidovudine have been done [24].

The study of electrode kinetics of Co (II) with Penicillin benzyl sodium salt has been done by D. C. polarography [25]. Trace determination of Pb, Cu, Cd and Zn in ayurvedic drug, "Mahayograj guggulu & Amar sundari vati" has been done by polarographic technique [26].

Electro analytical Procedure have been used for determination of Heavy Metals in Brassica oleraceae ver. Botrytis[27]. Study of Electrode kinetics and thermodynamic parameters of drug isoniazid and tinidazole at D.M.E. have been done electrochemically [28-29].

The electrochemical behavior of some anti-inflammatory drugs like Aceclofenac, Tenoxicam, Droxicam and Ketoprofen has been studied by direct current polarography (DCP), DPP and other polarographic techniques [30-33].

Electrochemical study and determination of thermodynamic parameters of Cd^{2+} complexes of some antibiotics and vitamin B_X system has been done at dropping mercury electrode [34].

The present study is to investigate the electrochemical behavior of different drugs like, anti-inflammatory (Curcumin), anti-asthmatic (Theophylline), for gastric ulcer (Yashad Bhasma), for nervous disorders (Nag Bhasma) by polarography. Further, metal complexes of such drugs with Zn, Pb, Cd, Ni, Cu etc. have also been studied.

Theophylline

The antibacterial activity of theophylline is well known, especially as this alkaloid is present in tea leaves [35]. Its primary mode of action is inhibiting phosphodiesterase, thus causing relaxation of the bronchiole walls. Theophylline also exerts excitatory influences on the skeletal muscle, gastric secretion, kidneys and fatty acid metabolism in addition to inhibitory effects on smooth muscle.

Furthermore, Theophylline has biological importance which can be used in anticancer drugs [36-39]. The purines, include theophylline, theobromine and caffeine, constitute an important class of anti-inflammatory agents [40]. Theophylline has biological importance as it is structurally related to nucleic acids components [41]. Thus it can be used as a drug in therapy for respiratory such as COPD or asthma under a variety of brand names and anticancer drugs.

Curcumin

Curcumin is an active principle of turmeric (*Curcuma Longa Linn.*) which has a long history of medicinal use in the Middle East and India. Extensive scientific research on Curcumin have demonstrated anti-inflammatory [42-43], anticancer [44-46] and potent antioxidant [47-51] activities apart from its promising role in variety of disease conditions including AIDS, Alzheimer's disorders [52].

Curcumin and its derivatives are free-radical scavengers, interacting with the oxidative cascade by quenching oxygen and chelating and disarming oxidative properties of metal ions [53-54]. Biological activity of curcumin has been attributed to the benzene rings and the diketonic structure [55]. In the hybridization process, curcumin is selected as an indicator [56].

Ayurvedic Bhasma

Herbs and minerals are the integral parts of traditional systems of medicine in many countries. Herbo-Mineral medicinal preparations called Bhasma are unique to the Ayurvedic and Siddha systems of Indian Traditional Medicine. These preparations have been used since long and are claimed to be the very effective and potent dosage form. According to Ayurvedic treatises, there are seven dhaatus (metals)-gold, silver, copper, iron, tin, lead and zinc-which are essential elements of the body. Perfect health is attributed to the state of equilibrium of these dhaatus in body tissues. Any imbalance excess or deficiency-disturbs the functioning of the body. Every mineral or metal in its native form is basically a biological product and Ayurveda has a way of converting the minerals into a biological form, which can be easily assimilated into the body. Different herbs are brought together and made to react with the mineral by rubbing, boiling or burning together. Ayurveda uses mineral ash after restoring its biological qualities called as Bhasma. Bhasma in Ayurveda has been defined as a substance obtained by calcination. Bhasma is a calcined preparation in which the gem or metal is converted into ash. Gems or metals are purified to remove impurities and treated by triturating and macerating in herbal extracts. The dough so obtained is calcinated to obtain the ashes. Bhasmas are unique Ayurvedic metallic preparations used for medicinal purposes.

Yashad Bhasma

Zinc is the metabolically important trace mineral micronutrients. Zinc is present in blood, brain, nerve tissue and muscles. Imbalance causes problems related to nervous system like depression, anxiety, dullness of intellect, extreme forgetfulness and irritable temperament. Zinc Bhasma (Yashad Bhasma), the powder of zinc was characterized using modern physicochemical techniques. Yashad Bhasma is an alternative, diuretic, hypoglycaemic and astringent [57-58].

Nag Bhasma

Nag Bhasma (which includes lead and different herbs) is one of such metallic preparation used in various diseases such as diarrhea, spleen enlargement and diabetes. Though some research work has been carried out on the different curative applications of Nag Bhasma but none of them give the detail on the elemental and structural composition of the drug Nag Bhasma which is an essential requirement to discuss its non-toxicity and therapeutic value [59-64].

Polarographic study of Indian drugs – metal complexes

Role of metals in biological systems is well established for quite some time because around 30 elements are recognized as essential to life. Some of them such as lead and cadmium play negative role as they are toxic. Living cell depends on some metals for proper structure and functions. Metals function as co-enzyme, enabling the body to perform its vital function including energy production, growth and healing. Metals are grouped into two categories. (a) essential metals, (macrometals), (b) Trace metals (micrometals).

Macro metals such as Na, K, Mg, Fe, Ca etc. are needed by

the body in larger amounts. Micro metals include Zn, Ni, Co etc. are needed by the body in minute amounts.

Zinc

Zinc is an important trace element and a participant in numerous biochemical processes. It is an integral component of nearly 300 enzymes. Zinc is necessary for the formation of hydrochloric acid in the stomach via its role as the activator of the enzyme carbonic anhydrase. This role of zinc as well as its presence in the metalloenzymes carboxypeptidase A and B makes it especially important to gastrointestinal digestive function. Zinc is also a component in the metalloenzymes superoxide dismutase, alkaline phosphatase, alcohol dehydrogenase, as well as RNA and DNA polymerases [65]. Zinc is one of the most important trace elements. It is essential for all the living systems, even for microorganisms. There are about 300 metalloenzymes, where zinc ion is present in their active site or it plays a structural role [66-67]. Further zinc is a structural and catalytic co-factor of many metalloproteins, its deficiency causes metabolism defects and growth inhibition in microorganisms [68]. Zinc is one of the most significant biometal. It is an important component of many proteins. Zn^{2+} ion strongly interacts with electronegative sulphur, nitrogen, oxygen. It does not promote the formation of toxic free radicals [69]. Zinc is an essential microelement for all living systems including microorganisms. Zinc is required to maintain normal physiological and biochemical functions in cells. Moreover, zinc is used in prevention and therapy of many illnesses, itself or as a component of drugs (e.g. zinc bacitracin) and biopreparations [70].

Nickel

Nickel is present in trace quantity in human body and plays important role in functioning of biological processes [71]. Nickel is a part of so many enzymes which are present in human. Due to such biological importance, it becomes essential to study its complexing tendency with therapeutic compounds. It has been proved that complexation of metals with drugs influences biological process that are metal dependent [72]. Besides this metal drug complex may be more effective then drug itself. Earlier Ni^{2+} complexes with some drug have been studied by polarography [73].

Lead

Lead taken internally in any of its forms is highly toxic; the effects are usually felt after it has accumulated in the body over a period of time. The symptoms of lead poisoning are anemia, constipation, colic, headache, abdominal pain, memory loss, kidney failure, and weakness, pain, or tingling in the extremities [74]. Lead based paints and toys made from lead compounds are considered serious hazards for children [75].

Cadmium

Cadmium has very toxic biological effects at concentrations smaller than almost any commonly found mineral. Ingestion of any significant amount of cadmium causes immediate poisoning and damage to the liver and the kidneys. Inhalation of cadmium dust causes problems for the respiratory tract as well as for the kidneys, eventually death may follow [76]. Cd^{2+} is the most toxic element in the environment to which industrial civilization has exposed itself. In human beings, the concentration of Cd^{2+} increases, and they suffer from several diseases [77]. The concentration of Cd^{2+} in blood and serum can be reduced by ligand therapy [78].

Iron

Iron plays an important part in the metabolic processes of the animals, being a vital representative in the cells of all mammals. The function of the iron in the body is limited almost exclusively to the oxygen transport in the blood, through the hemoglobin. It is also present in some enzymes that catalyze reactions of cellular oxidation. There are several ferrous salts as ferrous sulfate that are quite effective in the anemia treatment due to the deficiency of iron. The dependence of life upon this transition metal is due to the fact that iron acts as a cofactor within the active site of key enzymes involved in these critical biochemical pathways [79].

Trace determination of copper, lead and cadmium have been done in whole blood and fish tissues by DDP [80] and in water and plant material by flame atomic absorption spectroscopy [81]. Zinc complexes with bioactive ligands catalyze many enzymatic processes in biological systems. The treatment of lead poisoning for people who have significantly high blood lead levels is given by chelation therapy [82].

All above findings have encouraged us to do the study of metal complexes with allopathic Indian drugs. Due to various applications, chemistry of metal complexes is engaging the attention of researchers in many disciplines.

A large number of pharmaceuticals can be reduced or oxidized in the available potential range and their waves can be used in their determination. It seems that often the therapeutical activity is paralleled by electrochemical reactivity. Pharmaceutical companies will use, whenever possible, officially approved methods of analysis. In the past, some polarographic analytical procedures were listed in numerous Pharmacopoeias. It should be a goal of electroanalytical chemists around the world to have them listed again. The lower costs, faster results, and the possibility for quickly detecting mishandlings by technicians, are powerful arguments [83].

A brief description of the two apparatus used and the technique employed in the present investigations are as follows:-

Elico Recording CL-357 Polarograph

An Elico Recording DC Polarograph CL-357 was used for measurement of current voltage relationship. This operates on the principle of electrochemical method of analysis for both, detection and determination of analytes in solution. Dummy cell is used for calibration of the instrument before measuring the current at different potential.

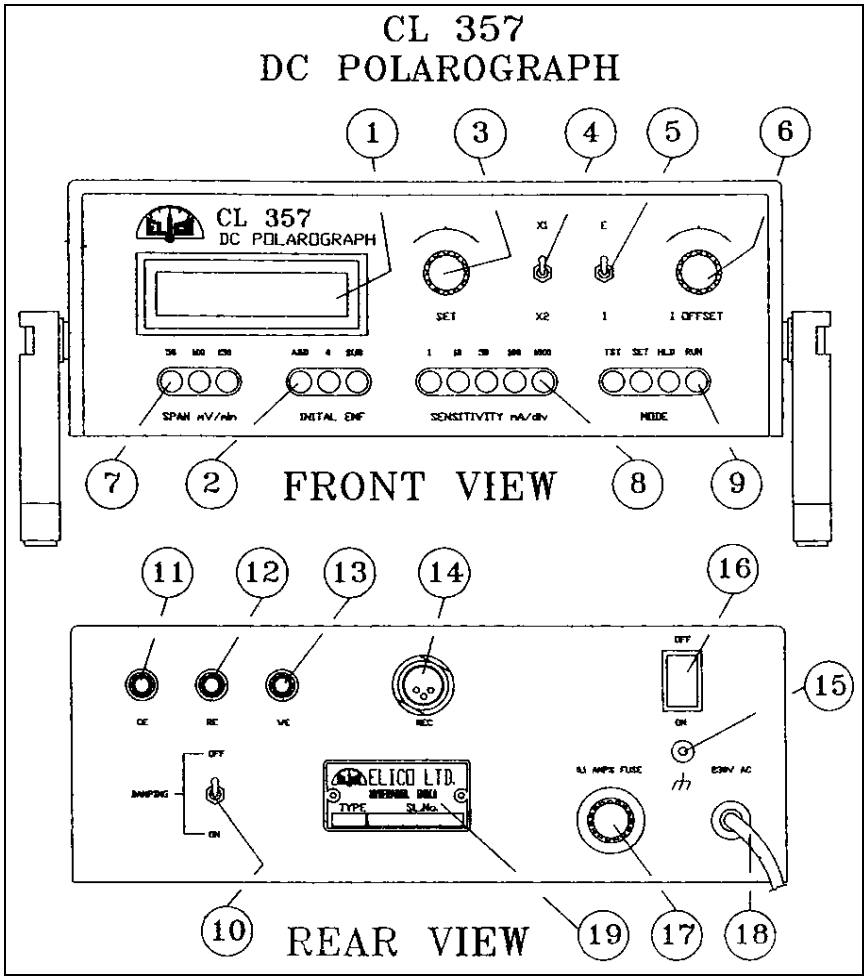

Fig 1: Elico Recording CL-357 Polarograph

The Elico recorder LR-101 P works on the AC mains and is provided with a fuse to protect it from damage due to higher line voltages.

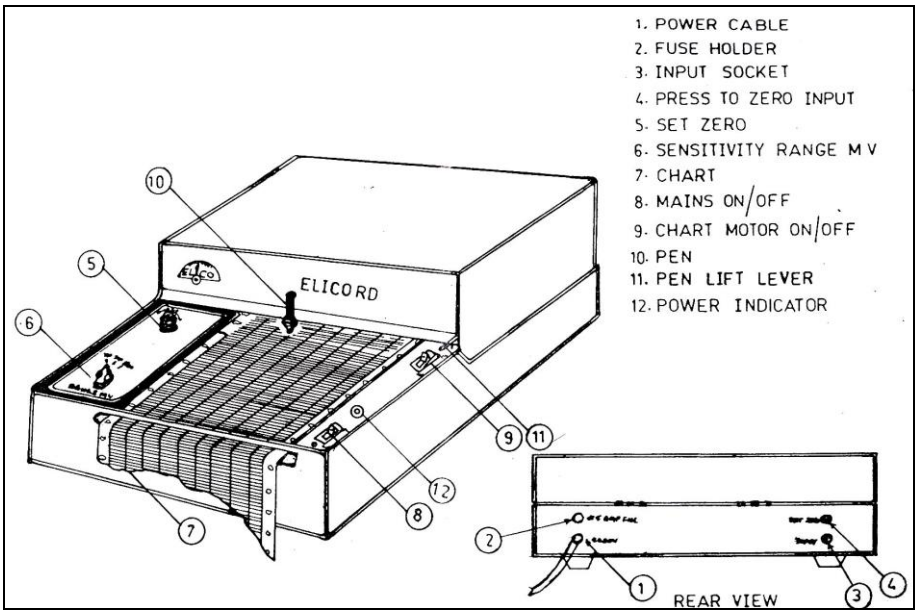

Fig 2: Elico recorder LR-101 P

Elico cl-362 Polarographic Analyser

An ELICO CL-362 POLAROGRAPHIC ANALYSER was used for measurement of current voltage relationship. Selectable modes of operation of this instrument are DCP, NPP, DPP, and Tats Polarography. This apparatus also have slow Acquisition mode for evaluating irreversible electrode reactions. Optional PC Compatibility with RS 232C interface and MS windows based software for data acquisition, processing, storage, retrieval, interpretation of data.

Fig 3: Elico CL-362 Polarographic Analyser

Fig 4: Printer Epson-LX-300+II

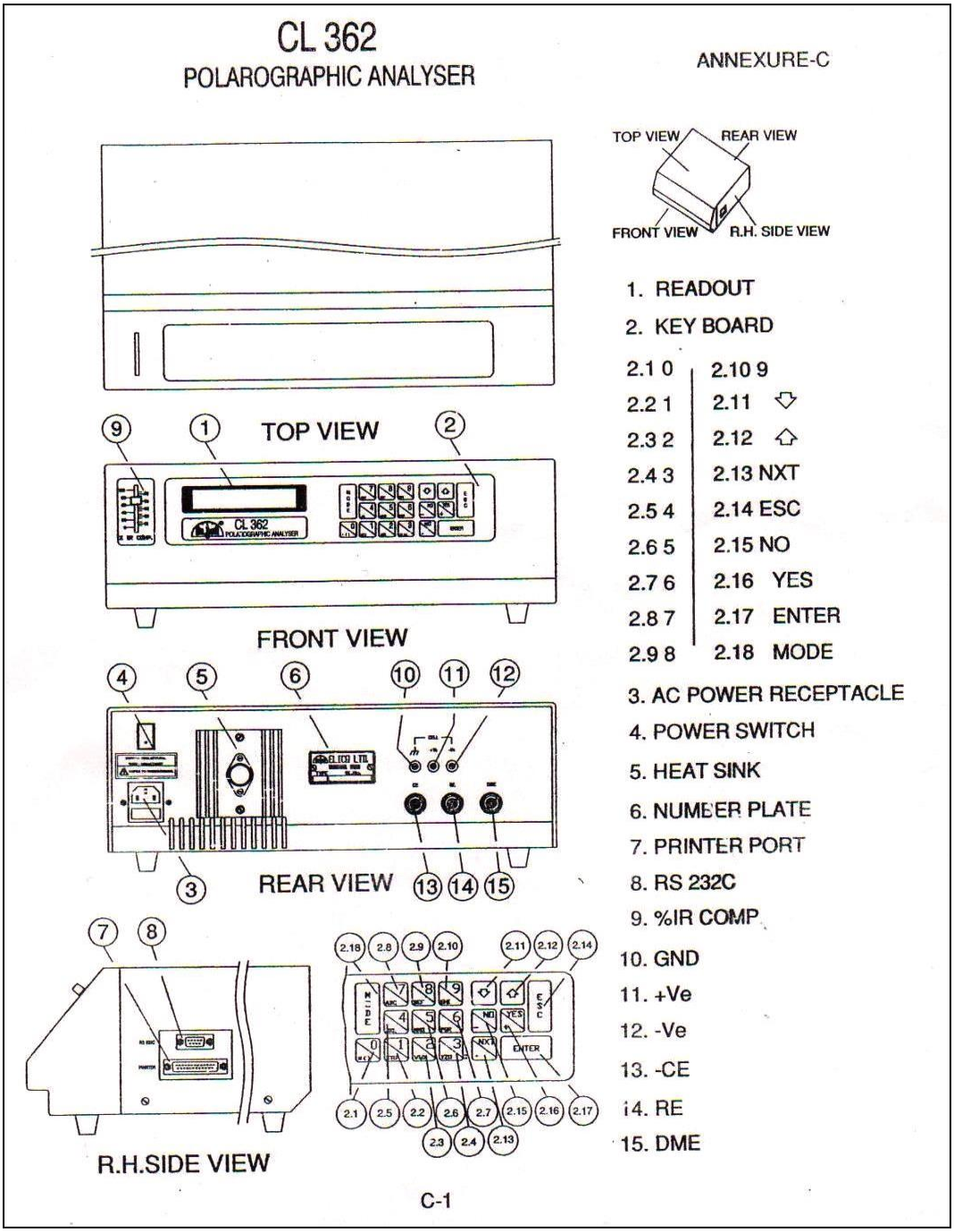

Fig 5: LICO CL-362 Polarographic Analyser

Polarographic cell in its stand

Stand: To clip the clamps holding the mercury reservoir and the polarographic cell.

Clamp: To hold the mercury reservoir and clip on to the stand at the desired height.

Mercury - Reservoir

This is a glass bulb filled with purified mercury; capillary connected to this bulb through a tycoon tube. Cathode terminal is coming from a glass tube fitted in between reservoir and capillary.

Polarographic Cell

It contains platinum counter electrode, standard calomel reference electrode and DME working electrode. It is necessary to fill saturated KCL solution from time to time in the reference electrode through side hole provided for the purpose. Nitrogen is passed through the inlet tube and it comes out through the outlet after bubbling through the solution.

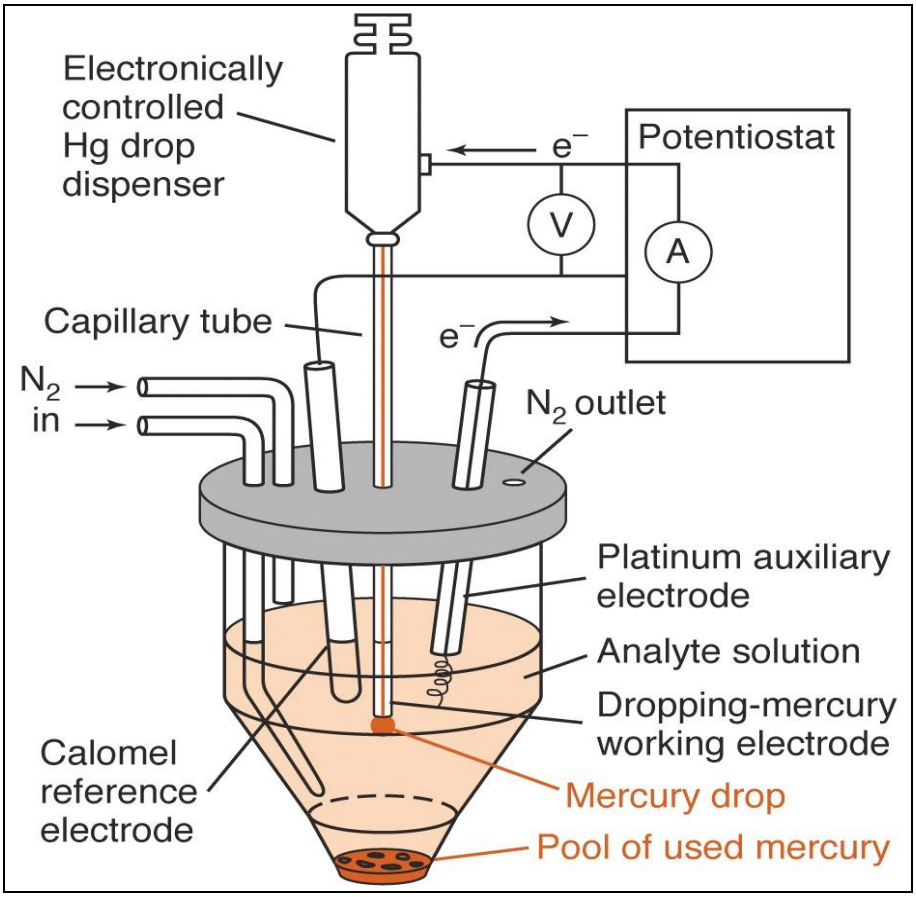

Fig 6: Polarographic cell assembly

Capillary

This is a 120mm long 0.05mm internal diameter capillary, one end of which is connected to the tycoon tube and the other end allows mercury to flow drop wise in the cell.

Thermostat

All the measurements were carried out at constant temperature that was maintained by using a Haake type ultra-thermostat (N6114). The constancy of the temperature was up to ±1 ^{0}C.

Measurement of *p*H

The measurements of pH were made on Elico pH meter (Model 111E). The pH of all solutions was adjusted to the desired value by adding either acid or base solution.

Oxygen removal Method

In every aqueous solution, open to the atmospheric condition the concentration of dissolved oxygen is about 0.001M. Oxygen is reduced polarographically and gives two waves of approximately equal height at 0.1V and 0.9V this overlap with waves occurring over a wide potential range. In addition to this interference, hydroxyl ions formed at the electrode surface can affect the waves of other depolarizers, and precipitate heavy metal hydroxide.

Oxygen removal from solutions is done by the rapid passage of a purified inert gas through cell for 10-15 minutes. Nitrogen from cylinders is suitable for this purpose. The nitrogen gas does not react with most of the solutions. The last traces of the oxygen from nitrogen cylinder were removed by passing the gas in the solution of vanadous chloride and then through distilled water.

Measurement of 'm' and 't'

The rate of flow of mercury in milligrams per second was determined by weighing and collecting a definite number of drops for a definite period of time in the solution of the supporting electrolyte. The drop time was measured at the desired potential by clocking ten drops with a stopwatch (ROCAR Swiss made). The hydrostatic pressure of 60 to 70 cm of mercury column was adjusted to give a drop time of 5 to 2 second per drop and rate of flow between 3 to 1 mg / sec.

Supporting Electrolytes

The sample to be analyzed polarographically is usually taken in a suitable solution having a reasonable dielectric constant that can neither be reduced nor oxidized at mercury electrode. This solution is called supporting electrolyte. The electro active substance must be brought into a true solution, because colloidal substances are either polarographically inactive or they interfere. The sample is added to a supporting electrolyte to suppress migration current, should be at least fifty times larger than that of the reducible ion.

The essential requirements of a supporting electrolyte are as follows:-

1. The decomposition potential of its cation should be very negative so that its reduction current is well beyond range of the ions to be determined.
2. The elements to be studied should exits in the supporting electrolyte (base electrolyte) in one definite ionic from either as simple hydrated ions or a stable complex ions.
3. It should not react either with electroactive substance in the solution or with metallic mercury.
4. The correct choice of the supporting electrolyte can

give improved resolution of waves that coincide in other electrolytes.
5. Change in composition of supporting electrolyte may either change the wave sequence.
6. Half wave potential is affected by pH and complex ion formation. The correct choice of the supporting electrolyte represents the main problem to be solved by the analyst with his own experience.
7. The addition of a supporting electrolyte, whose ions contribute to the conductance but do not contribute to the diffusion current because they cannot be oxidized or reduced to any significant extent when they arrive at the drop surface, causes the transference number of the electroactive ion to decrease.

Electrolyte solutions can be aqueous or non-aqueous. A wide range of salts can be used for aqueous electrolyte solution. Since the redox potentials of some compounds are pH sensitive, buffered solutions should be used for these compounds. Suitable non-aqueous solvents include acetonitrile, DMF, DMSO, THF, methylene chloride and propylene carbonate. Salts for non-aqueous electrolyte solutions typically consist of a large cation (e.g., tetraalkylammonium cations), and large anions (e.g. hexafluorophosphate, tetrafluoborate) to ensure full dissociation.

Chemicals

Analytical grade reagents were used in present investigation. Stock solution of Pb (II), Cu (II), Zn (II), Fe (II), Ni (II) and Cd (II) were prepared by dissolving their acetate, chloride and nitrate etc. in triple distilled water. Phosphoric acid, potassium dihydrogen phosphate, dipotassium hydrogen phosphate, KNO_3, Acetic acid, HCl and trisodium phosphate were AR from Merck (Darmstadt, Germany). Triton X-100 was used as the maxima suppressor.

Mercury

Double distilled mercury was used in all the whole experiments. After collecting used mercury it is washed with distilled water thoroughly. Then it was treated with 10% nitric acid. Afterwards it was washed repeatedly with distilled water. Finally, mercury was distilled twice under reduced pressure with the help of a vacuum pump.

Procedure for polarographic analysis

The experimental solution was transferred to the polarographic cell. The cell was placed in the thermostat and the capillary was inserted in the solution. The solution was defeated by passing the purified nitrogen gas for about 10-15 minutes to remove the dissolved oxygen. The gas supply was then cut off and the current potential curves were measured manually or by recorder. Inert atmosphere was maintained throughout the measurements.

References

1. Walash MI, MK SE Din, Metwally ME, Shabana MR. J. Chin. Chem. Soc. 2005;52(5):927.
2. Rafique S, Idrees M, Nasim A, Akbar H, Athar A. Biotechnol. Mol. Bio. Rev. 2010;5(2):38.
3. Vire JC, Kauffmann JM. Research Trends Trivandrum, India. 1994;3:493.
4. Bozal B, Uslu B, Özkan SA. Int. J. Electrochemistry, 2011, 1.
5. Vives ES, Moreira S, Brienza SMB, Zucchi OLA, Filho VFN. J Radioanal. Nucl. Chem. 2006;270(1):147.
6. Ayad MM, Shalaby AA, Abdellatef HE, Elsaid HM. J. Pharm. Biomed. Anal. 1999;18(6):975.
7. Bortoleto GG, Macarovscha GT, Cadore S. J. Braz. Chem. Soc. 2004;15(2):313.
8. Amin AS. J. Pharm. Biomed. Anal. 2002;29(4):729.
9. Atay O, Dincol F. Anal. Lett. 1997;30(9):1675.
10. Maurer HH. J. Chromatogr. 1992;16(1-2):3.
11. Salgado HRN, Madge MDM, Storti PB. Acta Farm. Bonaerense. 2005;24(2):246.
12. Maurer HH. Anal. Bioanal. Chem. 2007;22:1315.
13. Lee MS, Kerns EH. Mass Spectrom. Rev. 1999;18(3-4):187.
14. Yazbi FAE, Korany MA, Bedair M. J Clin. Hosp. Pharm. 1985;10(4):373.
15. Shaikh T. Role of chemistry in drug discovery and drug design. Int. J Adv. Chem. Res. 2021;3(1):16-18. DOI: 10.33545/26646781.2021.v3.i1a.30
16. Gaber AAA, Ghandour MA, Said HSE. Anal. Lett. 2003;36(6):1245.
17. Torriero AAJ, Luco JM, Sereno L, Raba J. J. Pharma. Biomed. Anal. 2004;62(2):247.
18. Ries MAE. J. Pharma. Biomed. Anal. 2002;30(3):837.
19. Ghoneim MM, El-Desoky HS, El-Ries MA, Abd-Elaziz AM. Chemical Papers. 2008;62(2):127.
20. Nan S, Welmin M, Baoxiang H, Zhenlu S. Anal. Bioanal. Chem. 2006;385:161.
21. Beltagi AM, El-Attar MA, Ghoneim EM. Central Euro. J. Chem. 2007;5(3):835.
22. Bontchev PR, Pantcheva IN, Gochey G. Trans. Met. Chem. 2000;25(2):196.
23. Samota S, Garg A, Pandey R. Portugaliae Electrochimica Acta. 2010;28(2):87.
24. Singh M, Meena OP, Garg A, Kumar Y, Pandey R. Int. J. Pharma and Bio Sci. 2011;2(1):378.
25. Sharda Sharma S, Pandey R. Int. J. Chem Tech Res. 2011;3(1):217.
26. Sharma S, Dhingra P, Pandey RS. J. Indian Chem. Soc. 2008;85:962.
27. Meena OP, Garg A, Kumar Y, Pandey R. Int J Pharm Pharm Sci. 2011;3(3):1596.
28. Garg A, Meena OP, Kumar Y, Pandey R. Int J Pharm Pharm Sci. 2012;4(2):154.
29. Garg A, Meena OP, Kumar Y, Singh M, Pandey R. Int. J. Pharma. Sci. Res. 2011;2(4):882.
30. Acuna JA, Vazquez MD, Tascon ML, Batanero PS. J. Pharm. Biomed. Anal. 2004;36(1):157.
31. Atkopar Z, Tuncel M. Anal. Lett. 1996;29(13):2383.
32. Singh AK, García PL, Gomes FP, Hackmann ERMK, Santoro MIRM, Braz. J. Pharm. Sci. 2007;43(4):615.
33. Ghoneim MM, Tawfik A. Can. J. Chem. 2003;81(8):889.
34. Acuna JA, Vazquez MD, Tascon ML, Batanero PS. J. Pharm. Biomed. Anal. 2004;36(1):157.
35. Chadar SN, Khan F, Sharma S. Chemija. 2008;19(3-4):1.
36. Dreosti IE. Nutr. Rev. 1996;54:51.
37. Waters RS, Bryden NA, Patterson KY, Veillon C, Anderson RA. Biol. Trace Elem. Res. 2001;83:207.
38. Fhid O, Zeglam T, Anwair T, Alag M, Almog T. Int. J. Pharm. Bio. Archives. 2012;3(3):507.
39. Magonet E, Hayen P, Delface D, Delaive E, Remacle J.

Biochem. J. 1992;287:361.
40. Hussain AA, Amiery A. J Applied Sci. Res. 2011;7(4):470.
41. Dong ZM, Zhao GC. Analyst. 2013;138:2456.
42. Stefanitsi D, Garel JR. Microbiol. 1997;24:180.
43. Nawaz A, Khan GM, Hussain A, Ahmad A, Khan A, Safdar M. Gomal Uni. J. Research. 2011;27(1):7.
44. Jurenka JS. Alternative Medicine Review. 2009;14(2):141.
45. Nagpal M, Sood S. J Natural Sci. Bio. Med. 2013;4(1):3.
46. Hendrayani SF, Al-Khalaf HH, Aboussekhra A, Neoplasi. 2013;15(6):631.
47. Bayomi SM, El-Kashef HA, El-Ashmawy MB, Nasr MNA, El-Sherbeny MA, Badria FA, *et al*. Med Chem Res. 2013;22:1147.
48. Kunchandy E, Rao MNA. Int'l J. Pharm. 1990;38:239.
49. Mahmoud EA, Elbessoumy AA. Int. J. Sciences. 2013;2(1).
50. Waseem M, Kaushik P, Parvez S. Cell Biochemistry and Function. 2013;31(6).
51. Motterlini R, Foresti R, Bassi R, Green CJ. Free Radical Biol. Med. 2000;28:1303.
52. Kuo ML, Huang TS, Lin JK. Biochim. Biophys. Acta. 1996;1317:95.
53. Choudhary N, Sekhon BS. J Pharm Educ Res. 2012;3(2):64.
54. Tonnesen HH. Int. J. Pharm. 1989;50:91.
55. Kunchandy E, MN. A. Rao. Int. J. Pharm. 1990;58:237.
56. Huang MT, Lysz T, Ferrao T, Abidl T, Laskin JD, Conney AH. Cancer Res. 1991;51:813.
57. Lin X, Chen J, Zheng Y, Chen W, Zhang Y, Wu P. Faming Zhuanli Shenqing Gongkai Shuomingshu, 2007, 9.
58. Manohar CM. Ayurveda for All, Pustak Mahal, New Delhi, 2005.
59. Umrani RD, Paknikar KM. J Biomed Nanotechnol. 2011;1:148.
60. Bhowmick TK, Suresh AK, Kane SG, Joshi AC, Bellare JR. Journal of Nanoparticle Research. 2008;11(3):655.
61. Pearce JMS. European neurology. 2007;57(2):118.
62. Gilbert G, Weiss B. Neurotoxicology. 2006;27(5):693.
63. Garg M, Das S, Singh G. Indian J. Pharma. Sci. 2012;74(6):535.
64. Singh M, Damodar J, Arya NC. Anci Sci Life. 1989;9:95.
65. Mishra GV, Vohora SB. Asian J Exp Sci. 2001;15:27.
66. Waters RS, Bryden NA, Patterson KY, Veillon CRA. Anderson, Biol. Trace Elem. Res. 2001;83:207.
67. Fridovich I. Science. 1978;10:875.
68. Magonet E, Hayen P, Delface D, Delaive E, Remacle J. Biochem. J. 1992;287:361.
69. Sigel H, Sigel A. Metal Ions in Biological Systems, Marcel Dekker, New York, 1983, 15.
70. Berg JM, Shi Y. 1996;271:1081.
71. Stefanitsi D, Garel JR. Microbiol. 1997;24:180.
72. Andrews RK, Blakely RL, Zermer B. Advances in Inorganic Biochemistry. 1984;5:245.
73. Apostolova M, Nachev C, Koleva M, Bontchev PR, Kehaiov I. Talenta. 1998;46:325.
74. Rizk MS, Belal F, Ibrahim FA, Ahmed SM, Sheribah ZA. Electroanalysis. 2000;12(7):531.
75. Pearce JMS. European neurolog. 2007;57(2):118.
76. Gilbert G, Weiss B. Neurotoxicology. 2006;27(5):693.
77. Zevenhoven R, Kilpinen P. Control of Pollutants in Flue Gases and Fuel Gases TKK, Espoo, 2001, 1.
78. Xu DX, Shen HM, Zhu QX. Mut Res. 2003;534:155.
79. Gubrelay U, Mathur R, Flora SJ. Ind J. Pharmacol. 1998;30:209.
80. Kalinowski DS, Richardson DR. Pharmacological Reviews. 2005;57(4):547.
81. Sharma P, Gehlot K. Transaction of the SAEST. 2004;39:49.
82. Sella SM, Avila AK, Campas RC. Analytical Letters. 1999;32(10):2082.
83. Chisolm JJ. Lead poisoning, Scientific American. 1971;224(2).
84. Zuman P. Review Acta Chim. Slov. 2009;56:18.
85. Jack DB, Dean S, Kendall MJ, Laugher S. J. Chromatogr. 1980;196(1):189.